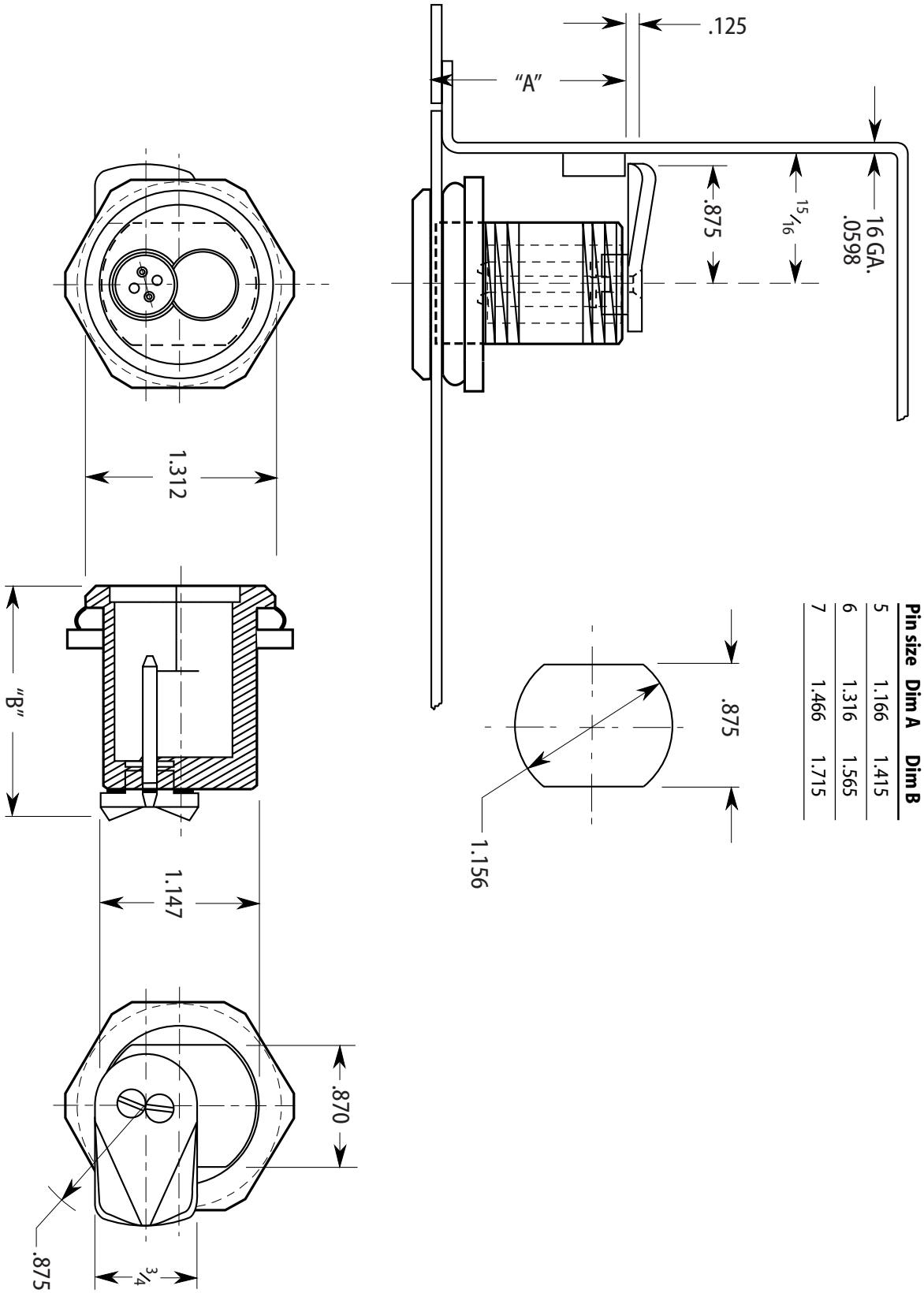

Pin size	Dim A	Dim B
5	1.166	1.415
6	1.316	1.565
7	1.466	1.715

Title						
Template for 1E_D4 Cylinders				BEST ACCESS SYSTEMS		
Series	Backset	Trim style	Door thickness	Rev date	Template number	Rev
1E_D4				04/1999	E02	B

T61966/Rev B 1794930 ER-7991-1